HÜTTEMANN

GLULAM TIMBER ELEMENTS

ALLOW SECURE PLANNING

Hüttemann Holz GmbH & Co. KG
Industriestraße · 59939 Olsberg
Telephone +49 2962/806-0
Fax +49 2962/3725
info@huettemann-holz.de
www.huettemann-holz.de

Hüttemann Wismar GmbH & Co. KG
Am Torney 14 · 23970 Wismar
Telephone +49 3841/221-0
Fax +49 3841/221-221
info@huettemann-wismar.de
www.huettemann-wismar.de

HÜTTEMANN

GLULAM TIMBER ELEMENTS

Foreword

Hüttemann glulam timber elements (HBE) have established themselves on the market for use as floor, roof and wall elements in solid wood construction, skeleton construction, wood frame construction and in combination with solid stone construction.

We have taken what we learned through consultation and discussion with planners and processors since publication of the first edition of "Deckenfibel" and put it into practice in this second edition. We would like to extend our thanks to the specialised wood retailers who gave us the opportunity to present our solid wood construction system at trainings and wood building days. The flexible system of glulam elements has provided wood builders with a material that can meet all current requirements for new buildings, renovation and expansions.

What is Glulam Timber?

Glulam timber (glued laminated timber) is an industrially manufactured building material.
Individual boards of coniferous wood are glued together into cross-sections of various dimensions. Glulam timber can be produced by companies who possess a corresponding certification (glulam manufacturing approval) according to DIN 1052 verifying their ability to create glued laminated structural elements. In terms of surfaces, one differentiates between visible (v) and non-visible (nv) quality. The elements are subject to both internal and external monitoring.

Hüttemann glulam elements bear the corresponding conformity mark. We are also members of the Studiengemeinschaft Holzleimbau e.V. (Glued Laminated Timber Research Association), and Hüttemann-Meisterholz bears the quality seal of the quality association BSHolz e.V.

- Germany: Major glulam manufacturing approval

FMPA Stuttgart

- Austria: ÖNorm EN386

- Netherlands: SHK Komo
- Denmark: DAN-Cert
- Japan: JAS
- USA: WCLB

HÜTTEMANN

GLULAM TIMBER ELEMENTS

Technical Data:

Material:

- Norway spruce
- BS11 (GL24)
- Melamine resin glue
- Surfaces: Visible or non-visible
- Apparent density: rho = 450 kg/m^3
- Wood moisture: Upon manufacturing 10 +- 2%

Physical Construction Data:

- Water vapour diffusion resistance coefficient: m = 40
- Rated thermal conductivity value: Lambda R = 0.13 W/(m x K)
- The characteristic value of the swelling and shrinking dimensions perpendicular to the fibre
  in % per 1% change in wood moisture for glulam timber of coniferous wood
  = 0.24

  An example calculation for this:
  Initial moisture = 12%; Final moisture = 16%; Component width = 600 mm
  Delta = 0.24/100 x (initial moisture in % - final moisture in %) x width in m
  = change in dimension in mm
  = 0.24/100 x (12%-16%) x 600 mm
  = 5.76 mm

HÜTTEMANN

GLULAM TIMBER ELEMENTS

- The maximum element length is 24.00 m
- Element thickness (ET) 60 mm and 80 mm up to an element width/available dimension of 320 mm.
- Elements with a thickness (ET) of 100 mm to 240 mm up to an element width/available dimension of 960 mm.
- Special dimensions upon request

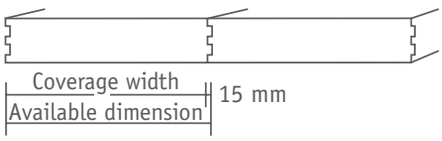

Diverse Profiling Options

Single groove - single tongue

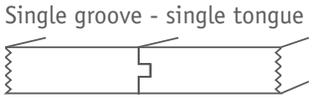

up to an element thickness (ET) of 60 mm

Double groove - double tongue

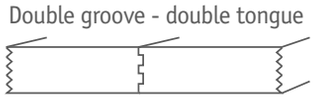

ET from 80 mm to 240 mm

Groove - groove

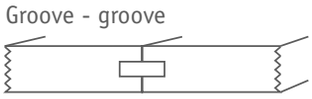

ET from 60 mm to 240 mm

Rebate - rebate

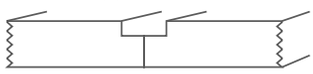

ET from 60 mm to 240 mm

Groove - rebate

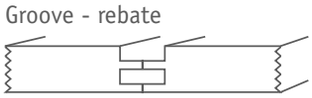

ET from 80 mm to 240 mm

Double groove - double tongue with rebate

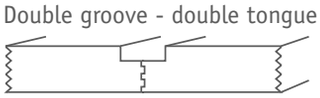

ET from 100 mm to 240 mm

Double groove - double tongue with groove

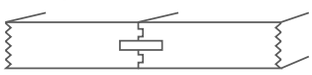

ET from 100 mm to 240 mm

Double groove - double tongue with groove and rebate

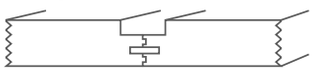

ET from 140 mm to 240 mm

HÜTTEMANN

GLULAM TIMBER ELEMENTS

Squared timber

From an element thickness (ET) of 120 mm to 280 mm and up to an available dimension of 200 mm.

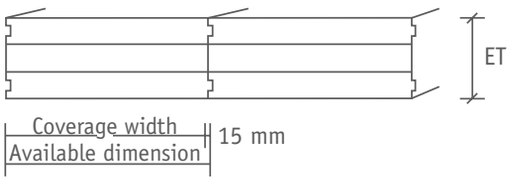

Definition of Terms and Possible Dimensions

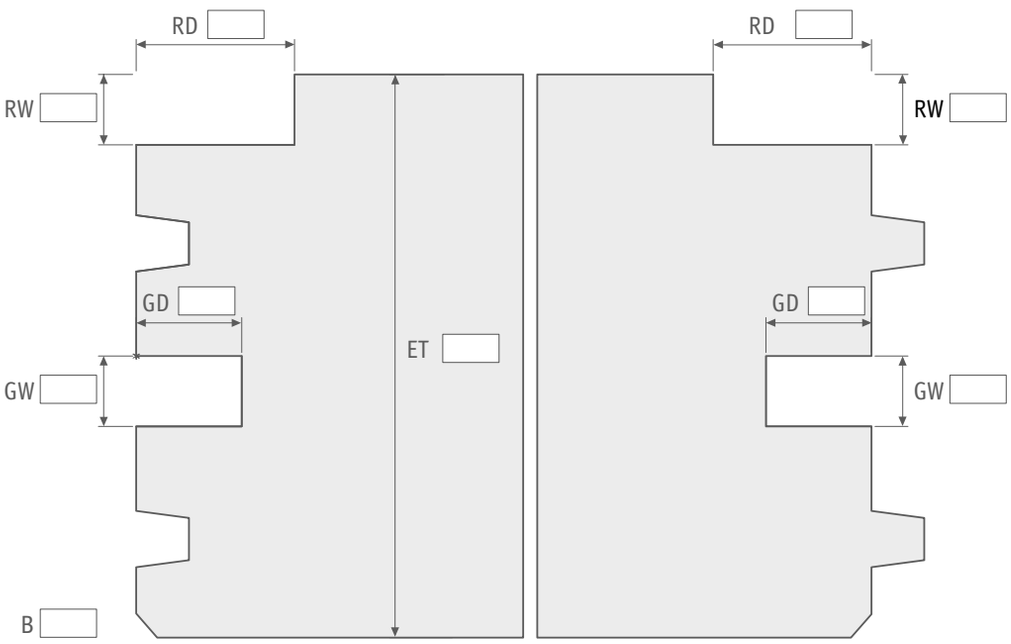

RD	= Rebate depth:	30 - 45 mm (5 mm steps)
RW	= Rebate width:	7 - 25 mm (1 mm steps)
GD	= Groove depth:	25 or 30 mm
GW	= Groove width:	20 - 30 mm (1 mm steps)
B	= Bevel:	2 mm (other dimensions on request)

ET = Element thickness: Depending on profiling: 60 - 240 mm (20 mm steps)

☐ = Dimensional information

HÜTTEMANN

GLULAM TIMBER ELEMENTS

Glulam Timber Surface Quality

Criteria [x1]	Industrial Quality	Visible Quality
1 Solidly intergrown branches [x2 x3]	Permitted	Permitted
2 Fallen and loose branches [x2 x3]	Permitted	Ø < 20 mm permitted [x4] Ø > 20 mm must be replaced at the factory [x4]
3 Pitch pockets [x3 x5]	Permitted	to 5 mm width Pitch pockets are permitted
4 Knots and missing areas mended with knot hole plugs or wood patches [x3]	Not necessary	Permitted
5 Knots and pitch pockets mended with filling compounds [x3]	Not necessary	Permitted [x6]
6 Insect infestation [x3]	Worm grooves up to 2 mm are permitted	Worm holes are permitted up to 2 mm
7 Pith	Permitted	Permitted
8 Width of shrinkage cracks [x3 x5 x7]	No restrictions	up to 4 mm
9 Discolouration due to blue stain as well as red and brown nail-hard stripes [x5]	No restrictions	Up to 10% of the visible surface of the entire element
10 Fungal infestation [x5]	Not permitted	not permitted
11 Soiling [x5]	Permitted	Not permitted
12 Dovetail joint spacing	No restrictions	No restrictions;
13 Processing of the surface	Levelled	Planed and bevelled; Plane marks Permitted to 1 mm depth

x1: Deviations from the limit values defined below in cells 2, 3, 6-9, 12 and 13 are tolerated to the following extent: Maximum of three deviations/m² of visible surface for visible quality.

x2: Permissible knot size according to DIN 4074

x3: With no restriction on quantity

x4: Measurement of the knot diameter as for measurement of the diameter of individual knots for squared timber acc. to DIN 4074-1: 2003-6, 5.1.2.1.

x5: Delivery condition

x6: If necessary, filling compounds that can be painted over must be requested.

x7: Independent of the surface quality, elements with no planned transverse tensile load may have crack depths up to 1/6 of the element width; elements with planned transverse tensile load may have crack widths up to 1/8 of the element width from every side.

A comprehensive depiction of the surface qualities, including pictures, can be found in the article RADOVIC/WIEGAND "Surface Quality of Glulam Timber", which can be found at www.brettschichtholz.de in the download area.

HÜTTEMANN

ADVANTAGES OF GLULAM ELEMENTS

Solid and Safe Building Material

- Glulam elements satisfy the needs of builders for safe and solid construction methods.

Wide Ranging Applications

- Glulam elements can be used in solid wood construction, skeleton construction, wood frame construction, in combination with solid stone construction, in industrial construction and for renovations, repairs and alterations.

Healthy Room Climate

- Glulam elements are vapour-permeable and therefore produce a comfortable room climate (wood can take up moisture and release it again as necessary).

Better Physical Building Characteristics

- Glulam elements are vapour-retardant. Only the element joints must be sealed. Solid wood construction results in good summer heat protection.

Cost Savings

- The elements are easy to install (high level of prefabrication) and the subsequent work can be done without delay.
- No additional moisture is produced during installation.
- No curing times are required.
- The low dead weight reduces the amount of installation work and has a positive impact on the dimensions of the substructure (fast installation).
- Reworking can be done in a woodworking shop regardless of the weather. Due to the high level of prefabrication, errors are as good as non-existent.
- If desired, the glulam timber elements can be delivered with two threaded inserts each screwed into the top side. A cable loop is then screwed into these threaded inserts and used for lifting by crane.
- Grooves, holes and openings can be created easily and precisely "on site".

HÜTTEMANN

ADVANTAGES OF GLULAM ELEMENTS

Intermediate Ceilings

- It is frequently useful to build intermediate ceilings in commercially used rooms to create storage space. Glulam timber elements are excellently suited for this due to their low unit height.

Building Services

- In the profiling of glulam elements, it is possible to create grooves in the connection joint into which empty conduit can be laid for electrical installations. Subsequent installation of pipes for electrical lines and supply lines is possible almost anywhere.

Simple, System-Based Structural Characteristics

- The calculation takes place according to DIN 1052.
- Joining elements typical of wood construction: Self-drilling wood screws, perforated plates, angles or secondary-primary support connectors.
- A shearing-proof connection of the elements (plate formation) does not require extensive material or time.

Environmental Building Material

- Wood stores CO2
- Among all typical building materials, wood requires the least energy for processing and working.
- 1 t of wood takes up 1.9 t CO2. Of this, 500 kg of carbon is stored in the wood. That is active climate protection.
- No competing building material is produced, processed and used with so little total application of energy as wood.
  As a building material in solid construction, this differentiates glued laminated wood fundamentally from competing building materials, which require extensive energy to produce and have no benefits in terms of environmental balance.

Heating Cost Savings

- The room temperature can be reduced by several degrees due to the generally "warm" surface and the low thermal conductivity.

Natural Wood Protection

- No coat of paint is necessary, since the elements are dried down to a maximum of 12% wood moisture. In their installed condition, the elements correspond to hazard class (GK)0 according to DIN 68800.

High Fire Safety

- The glulam elements can reach fire safety classes of F30 B, F60 B and with covering even F90 B.

HÜTTEMANN

GLULAM TIMBER ELEMENTS

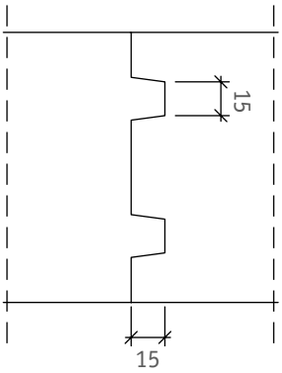

Glulam elements can be dimensioned according to DIN 4102-4 for the fire protection classes F30-B, F60-B and F90-B. Creation of the element connection joint as double groove - double tongue satisfies the requirements of DIN 4102-4, Table 61, f for floors to F60-B and Table 70, e for roofs to F60-B.

Summer Thermal Protection

- Wood has the highest heat storage capability of all typical building materials. This ensures that the heat resulting from solar energy is captured and stored over long periods. Only small amounts of heat are transmitted to the inside. During the night, the stored heat is released into the outside air.

Attractive Appearance

- Use of select individual lamellas in the visible area results in an attractive surface.

HÜTTEMANN

VIEWS

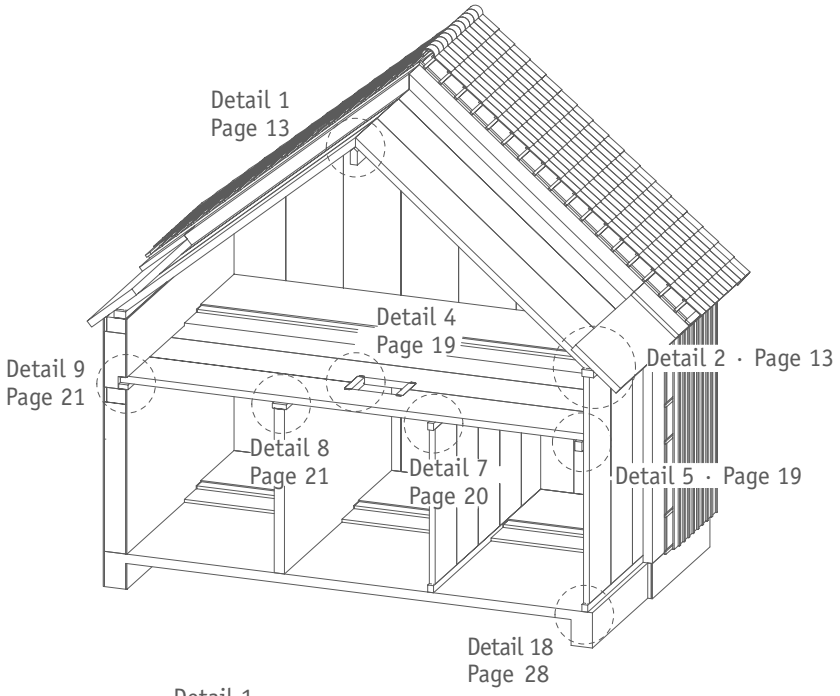

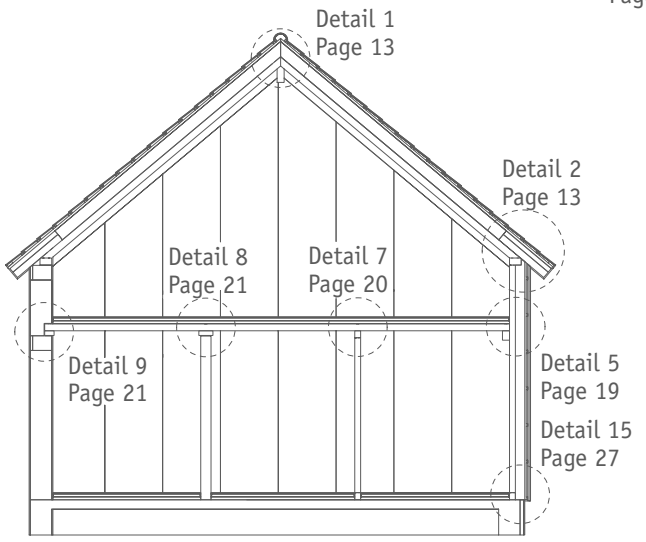

Cross-section A-A

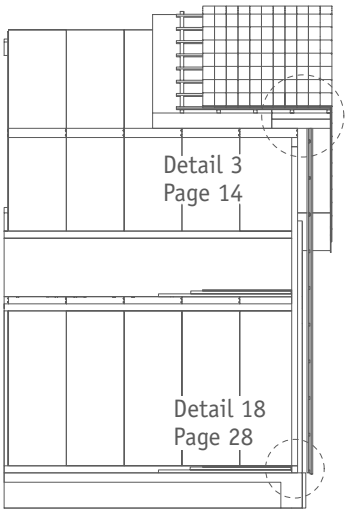

Cross-section B-B

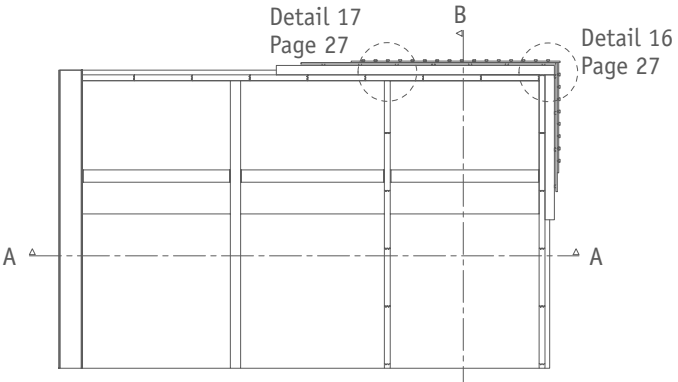

ground plan

The listed detail figures can be found in the individual areas Roof, Floor and Wall.

HÜTTEMANN

ROOF

Glulam timber elements replace rafters, purlins and boarding in the roof area while also featuring much smaller unit heights. Insulation and the sarking membrane are laid without interruption on a flat surface. This has clear advantages for the building's physical properties.

Structural Analysis

The design loads are determined according to DIN 1055. The following preliminary calculation assumes the following values for dead loads:

• Roofing (roof tiles):	0.55 kN/m^2
• Insulation (soft wood fibre) t = 16 cm:	0.15 kN/m^2
• Sarking membrane:	0.05 kN/m^2
• Glulam element (dead weight = 0.45 kN/m^3)	0.30 - 1.20 kN/m^2
• Dead load	g = 1.05 - 1.95 kN/m^2
• Snow load (location-dependant)	s = 0.75 kN/m^2

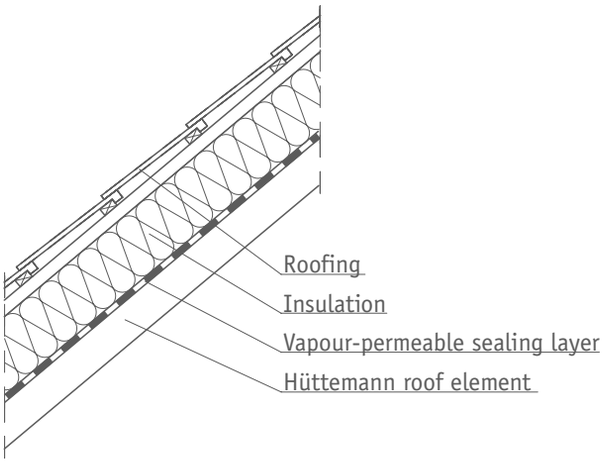

This roof structure and a glulam element thickness of 14 cm yields a U-value of 0.23 W/m^{2}K.

HÜTTEMANN

ROOF

Dimensioning Table for Roof Elements

The following parameters were used:

Roof incline	α = 40 °
Eaves height	ht = 3.50 m
Deflection limit	l/400
Single-span beam	

Minimum roof element thickness	Max. span width (basic length)
60 mm	1,90 m
80 mm	2,70 m
100 mm	3,40 m
120 mm	4,00 m
140 mm	4,60 m
160 mm	5,20 m
180 mm	5,70 m
200 mm	6,20 m
220 mm	6,70 m
240 mm	7,20 m

Cost Overview

Glulam roof elements are an alternative to classic roof trusses produced through typical carpentry. Visible rafters and boarding are replaced by glulam elements. Their vapour-permeable structure produces a comfortable living climate. Summer heat protection is built-in thanks to the wood mass.

The cost overview represents a cost estimate. You should obtain a detailed offer from your woodworking contractor. In addition, the thermal insulation, sealing layer and roofing must also be calculated into the price.

Hüttemann Roof Elements:

Material costs for glulam roof elements t = 10 cm:	52.00 €/m²
Material costs for shaped sheet metal parts, screws, etc.:	3.00 €/m²
Assembly / trimming costs for glulam roof elements:	20.00 €/m²
Total of material + installation costs:	75.00 €/m² plus VAT

HÜTTEMANN

DETAIL 1
RIDGE BEAM

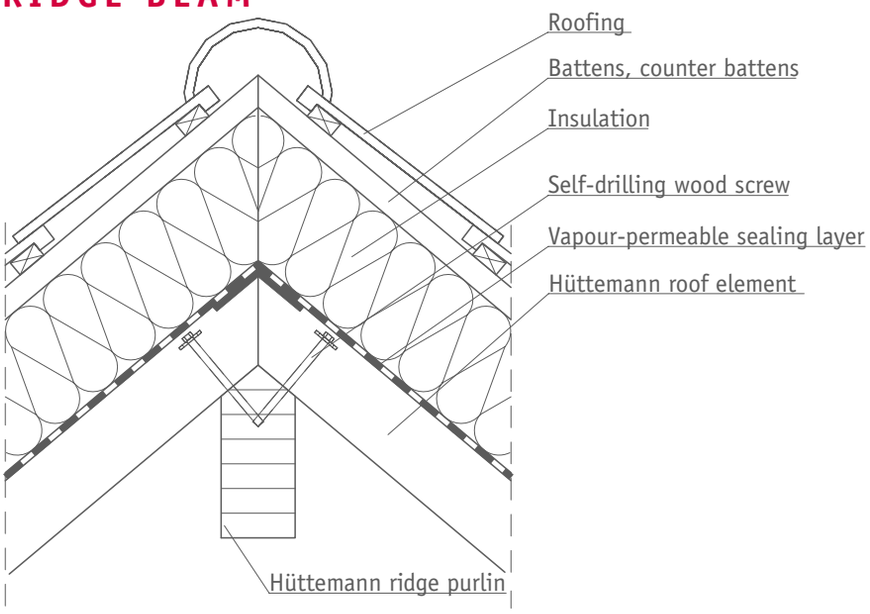

DETAIL 2
EAVES

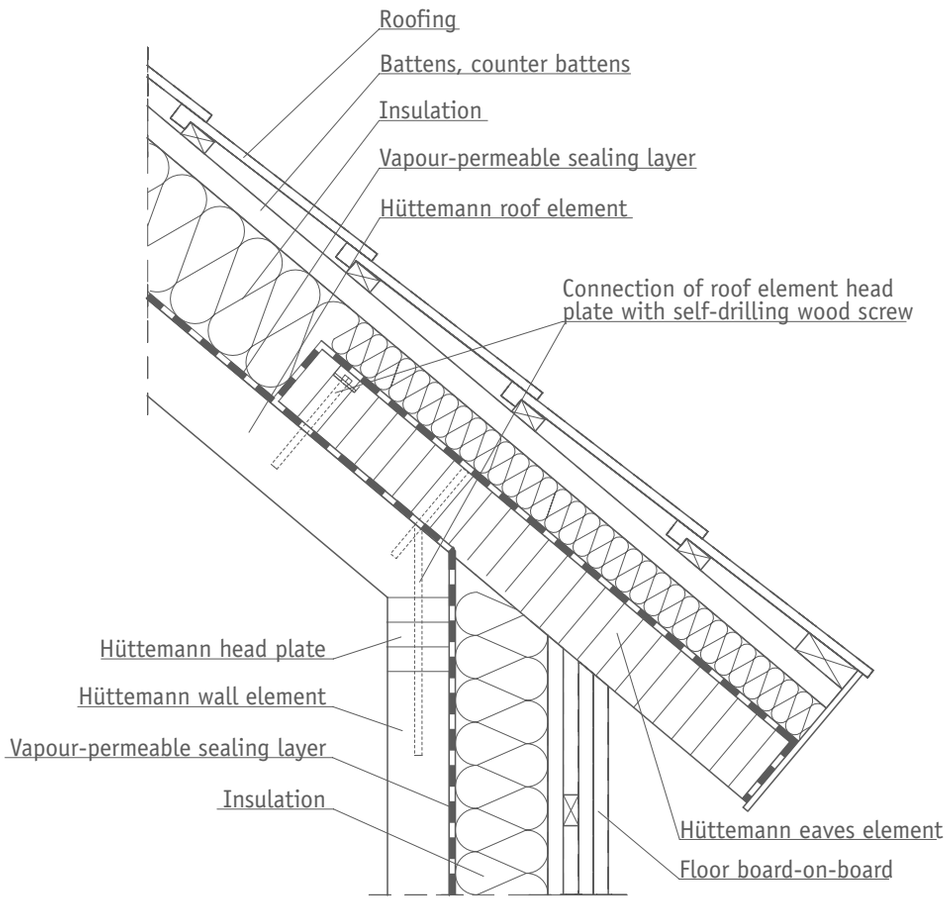

HÜTTEMANN

DETAIL 3
VERGE FLASHING

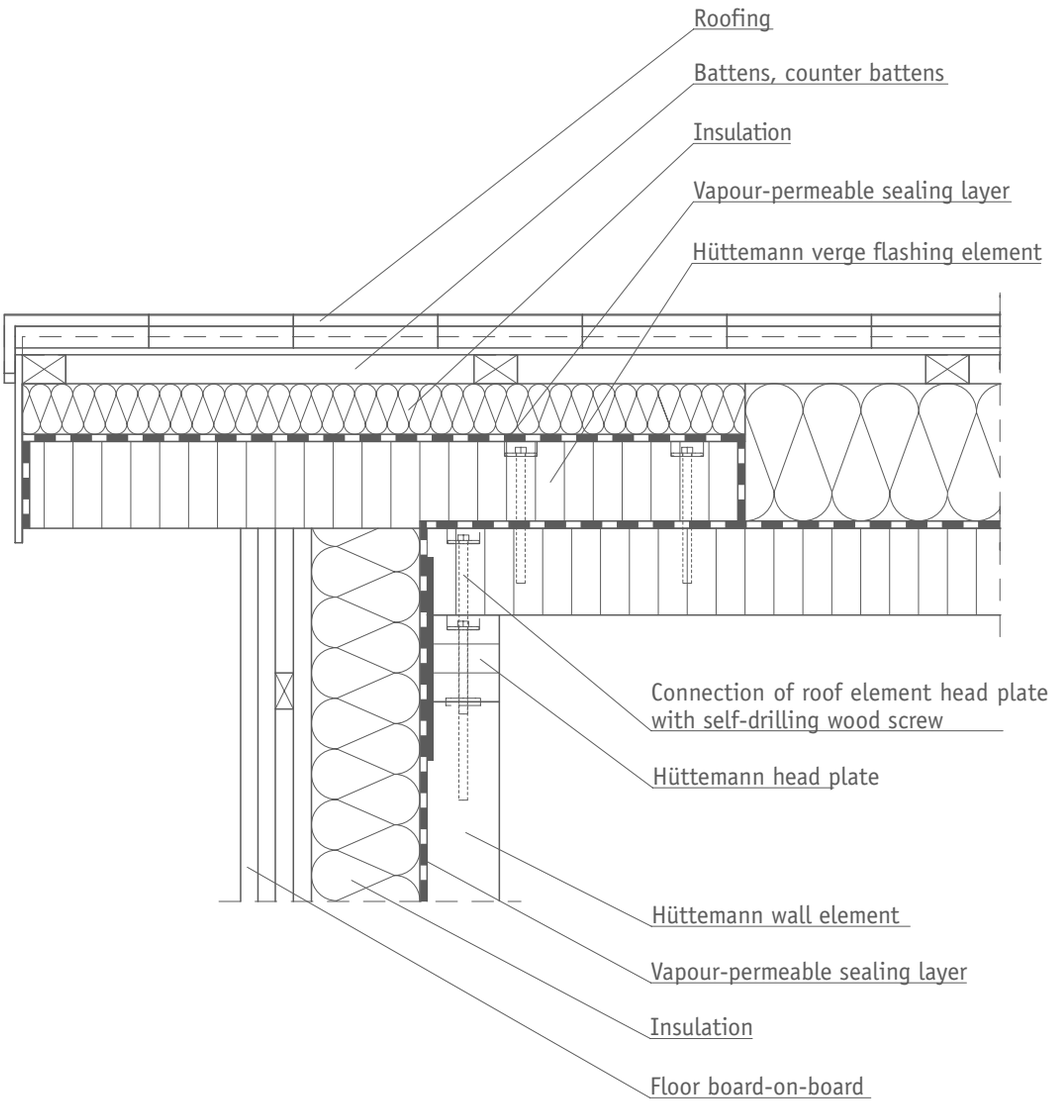

HÜTTEMANN

FLOOR

Simple and economical floor structures can be built with glulam timber elements. In new buildings, low-height structures that can bridge large span widths and are immediately capable of bearing weight can be created in a very short time. No additional moisture is produced during installation. Subsequent work can be performed immediately. Freedom of movement is ensured within the rooms below. For renovation work and adding additional floors, glulam timber elements can be used to good advantage. Existing structures, such as floors or roofs can be bridged over and therefore retained.

Impact Sound Values

Some floor structures are listed below along with their rated standard impact sound levels. Even more favourable values can be achieved through improvements in the areas of unfinished floor weight and subfloor. The German Society for Wood Research (DGfH) has commissioned research on this topic. Current results as well as a dimensioning program for calculating the impact sound insulation can be obtained from the DGfH.
The rated standard impact sound levels can be found in the brochure "Sound-Insulating Wood Beam and Multi-Ply Beam Floors" from INFORMATIONSDIENST HOLZ (published in May 1999). Other analyses (see mikado plus, 4/2005 edition) indicate still better values in some cases.

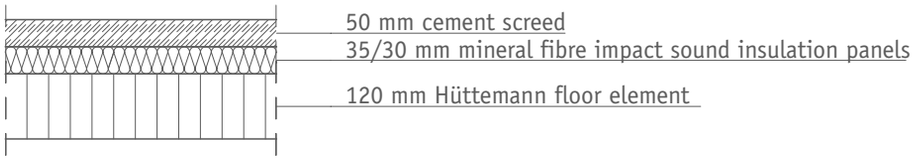

Floor structure 1: Rated standard impact sound level L'n,w = 66 dB

Floor structure 2: Rated standard impact sound level L'n,w = 51 dB

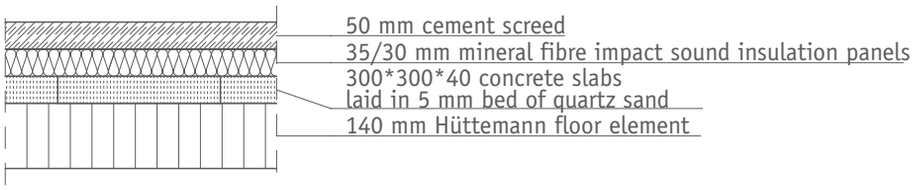

Floor structure 3: Rated standard impact sound level L'n,w = 52 dB

Floor structure 4: Rated standard impact sound level L'n,w = 46 dB

HÜTTEMANN

FLOOR

Dimensioning Table for Floor Elements

For purposes of preliminary dimensioning, the vibration can be taken into account with a deflection limit of l/450.

This corresponds roughly to the approach: 30% traffic load + 100% constant load = maximum 6 mm deflection

These preliminary dimensioning tables do not replace the structural analysis; they serve only as an aid to calculation. Creepage and shrinkage as well as the dead weight of the glulam timber elements are taken into account in the preliminary dimensioning in our dimensioning tables. The assumed maximum share of the constant load in the additional surface load is 3.0 kN/m^2.

Vibration Influence Accounted For

Creepage and shrinking as well as the dead weight of the glulam timber elements are taken into account.

Additional Surface Load Per m^2

Floor thickness

Element thickness	2.0 kN/m^2	2.5 kN/m^2	3.0 kN/m^2	3.5 kN/m^2	4.0 kN/m^2	4.5 kN/m^2	5.0 kN/m^2	5.5 kN/m^2	6.0 kN/m^2	6.5 kN/m^2	7.0 kN/m^2	7.5 kN/m^2	8.0 kN/m^2
60mm	2.15m	2.05m	1.90m	1.75m	1.65m	1.60m	1.55m	1.50m	1.45m	1.40m	1.35m	1.30m	1.25m
80mm	2.85m	2.70m	2.55m	2.40m	2.30m	2.20m	2.10m	2.00m	1.95m	1.90m	1.85m	1.80m	1.75m
100mm	3.50m	3.35m	3.20m	3.05m	2.90m	2.75m	2.65m	2.60m	2.55m	2.50m	2.45m	2.40m	2.35m
120mm	4.10m	3.90m	3.80m	3.60m	3.45m	3.30m	3.20m	3.15m	3.10m	3.05m	3.00m	2.95m	2.90m
140mm	4.70m	4.55m	4.40m	4.20m	4.00m	3.85m	3.75m	3.65m	3.55m	3.45m	3.40m	3.35m	3.30m
160mm	5.30m	5.15m	5.00m	4.70m	4.50m	4.40m	4.30m	4.15m	4.05m	3.95m	3.85m	3.80m	3.75m
180mm	5.90m	5.75m	5.60m	5.25m	5.05m	4.90m	4.80m	4.65m	4.55m	4.45m	4.35m	4.25m	4.20m
200mm	6.50m	6.30m	6.15m	5.80m	5.60m	5.45m	5.30m	5.10m	5.00m	4.90m	4.80m	4.70m	4.65m
220mm	7.00m	6.85m	6.65m	6.30m	6.05m	5.90m	5.80m	5.60m	5.50m	5.40m	5.25m	5.20m	5.15m
240mm	7.50m	7.35m	7.20m	6.80m	6.55m	6.40m	6.25m	6.05m	5.95m	5.85m	5.75m	5.70m	5.60m

Vibration Influence Not Accounted For (Deflection Limit l/300)

Creepage and shrinking as well as the dead weight of the glulam timber elements are taken into account.

Additional Surface Load Per m^2

Floor thickness

Element thickness	2.0 kN/m^2	2.5 kN/m^2	3.0 kN/m^2	3.5 kN/m^2	4.0 kN/m^2	4.5 kN/m^2	5.0 kN/m^2	5.5 kN/m^2	6.0 kN/m^2	6.5 kN/m^2	7.0 kN/m^2	7.5 kN/m^2	8.0 kN/m^2
60mm	2.50m	2.35m	2.20m	2.05m	1.95m	1.85m	1.80m	1.75m	1.70m	1.65m	1.60m	1.55m	1.50m
80mm	3.15m	3.10m	3.00m	2.85m	2.70m	2.55m	2.45m	2.40m	2.35m	2.30m	2.25m	2.20m	2.15m
100mm	4.00m	3.85m	3.70m	3.50m	3.30m	3.10m	3.00m	2.95m	2.90m	2.85m	2.80m	2.75m	2.70m
120mm	4.70m	4.55m	4.40m	4.15m	4.00m	3.80m	3.70m	3.60m	3.50m	3.40m	3.35m	3.30m	3.25m
140mm	5.40m	5.25m	5.10m	4.85m	4.70m	4.40m	4.30m	4.20m	4.10m	4.00m	3.95m	3.90m	3.85m
160mm	6.10m	5.95m	5.75m	5.45m	5.20m	4.95m	4.80m	4.70m	4.60m	4.50m	4.45m	4.40m	4.35m
180mm	6.80m	6.55m	6.40m	6.10m	5.80m	5.55m	5.45m	5.35m	5.20m	5.10m	5.05m	4.95m	4.85m
200mm	7.40m	7.20m	7.00m	6.70m	6.35m	6.05m	5.95m	5.85m	5.75m	5.65m	5.55m	5.45m	5.40m
220mm	8.00m	7.80m	7.60m	7.30m	6.90m	6.65m	6.55m	6.45m	6.25m	6.10m	6.00m	5.95m	5.90m
240mm	8.65m	8.45m	8.25m	7.75m	7.50m	7.25m	7.10m	7.00m	6.80m	6.65m	6.60m	6.50m	6.45m

HÜTTEMANN

FLOOR

Vibrations

Floor vibrations in the non-audible, low-frequency ranges are a problem. These vibrations are perceived as unpleasant by many people. We have integrated the vibration behaviour into our dimensioning tables.

Dimensioning Example

With consideration of vibrations, the floor typically has a thickness of: t = 16 cm

Floor dimensions:	l	= 4,50 m (open span)
	b	= 4,00 m (width of the floor panel)
Floor thickness:	d	= 16 cm
Loads:	eg	= 1,95 kN / m^2 (dead weight)
	p	= 2,00 kN / m^2 (traffic load)
	$\overline{m}$	= 100 x pd = 100 x (1,95 + 0,3 x 2,00) = 255 kg / m^2
Longitudinal beam (ceiling element):	h	= 0,16m
	E	= 11.000 MN / m^2
	(EI) l	= 11.000 x $0{,}16^2$ / 12 = 3,75 MNm^2 / m
Transverse beam (screed):	h	= 0,05m
	E	= 26.000 MN / m^2
	(EI) b	= 26.000 x $0{,}05^2$ / 12 = 0,2708 MNm^2 / m

Verification Based on the Frequency Criterion:

$$f = \pi / (2 \times l^2) \times (\sqrt{((EI)_l / \overline{m})}) \times (\sqrt{(1 + ((EI)_b \times l^4) / (EI)_l \times b^4)})$$

$$f = \pi / (2 \times 4.5^2) \times (\sqrt{((3{,}75 \times 10^6) / 255)}) \times (\sqrt{(1 + ((0.2708 / 3.75) \times (4.5^4 / 4^4))})$$

$$= 0.07757 \times 121.267 \times 1{,}056$$

$$= 9.936 \text{ Hz} > 8 \text{ Hz} = \text{positive verification}$$

FLOOR

Assembly of the Elements as a Floor Slab

Assembly of the floor elements as a slab presents no difficulties if the extent of recesses and openings is not too great.
In the typical verifications for single-family homes, the transverse forces arising are taken up by alternate-side nailing of the element butt joints.

Dimensioning Example:

Horizontal traffic load: $p = 2.00$ kN / m^2
Building length: $l = 10.00$ m
Element length: $b = 2.00$ m (minimum length that should be applied for assembly as a slab)

$M = p \times l^2 / 8 = 2.00 \times 10.00^2 / 8 = 25$ kNm

$D = Z = 25 / 2 = 12.5$ kN

Transverse force in the element connection joint:

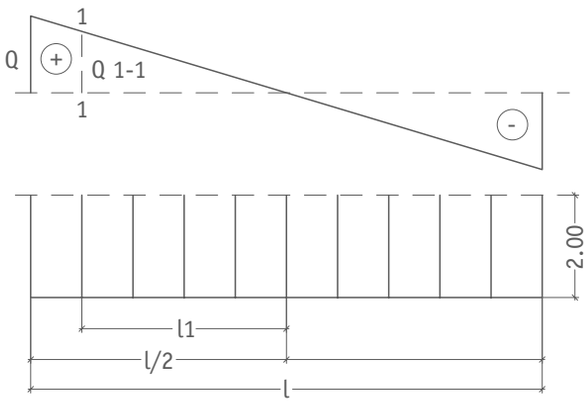

1st determination of the support force Q

$Q = p \times l / 2 = 2 \times 10 / 2 = 10$ kN

2nd determination of the transverse force Q1 - 1 in the first element connection joint

$Q1 - 1 = Q \times l1 / (l/2) = 10 \times 4 / (10 / 2) = 8$ kN
$= 4$ kN / m

Assembly of the connection via diagonal, alternate-side nailing, offset by 90°
Typically: Round wire nails as machine nails 3.8 x 100 mm spaced at
e = 0.20 m
Permissible nail load until shearing off Qa = 0.36 kN
Required number of nails n = Q1 - 1 / perm. Qa = 4.0 / 0.525 = 7.62 -> 8 nails over one meter of length, evenly distributed.

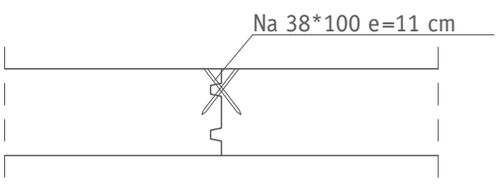

HÜTTEMANN

DETAIL 4
TRIMMING

Roof and floor structure not shown

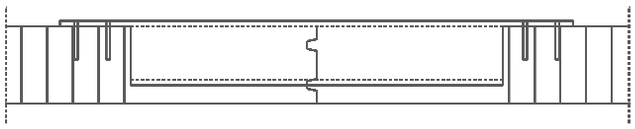

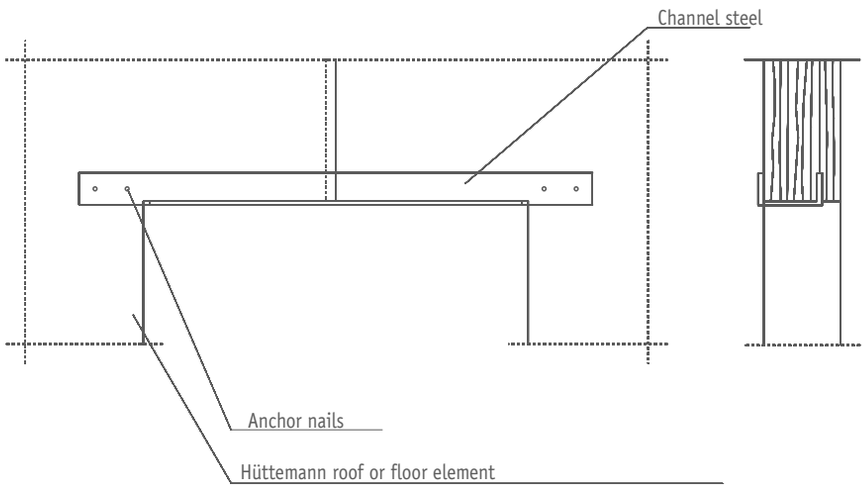

DETAIL 5
FLOOR PLATE TO WALL ELEMENT CONNECTION

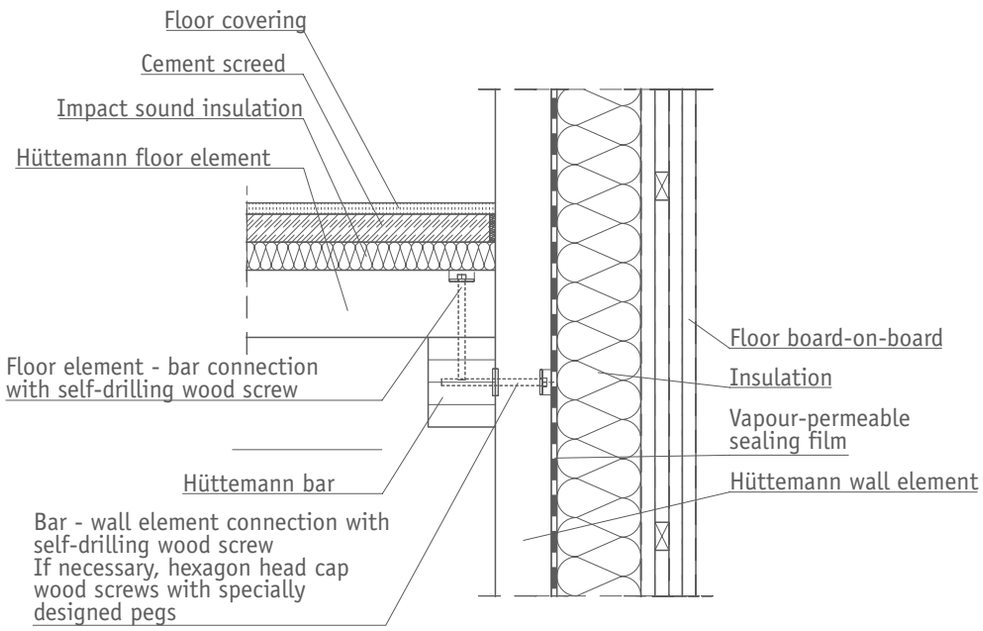

HÜTTEMANN

DETAIL 6
FLOOR PLATE TO WALL ELEMENT CONNECTION (OUTER WALL)

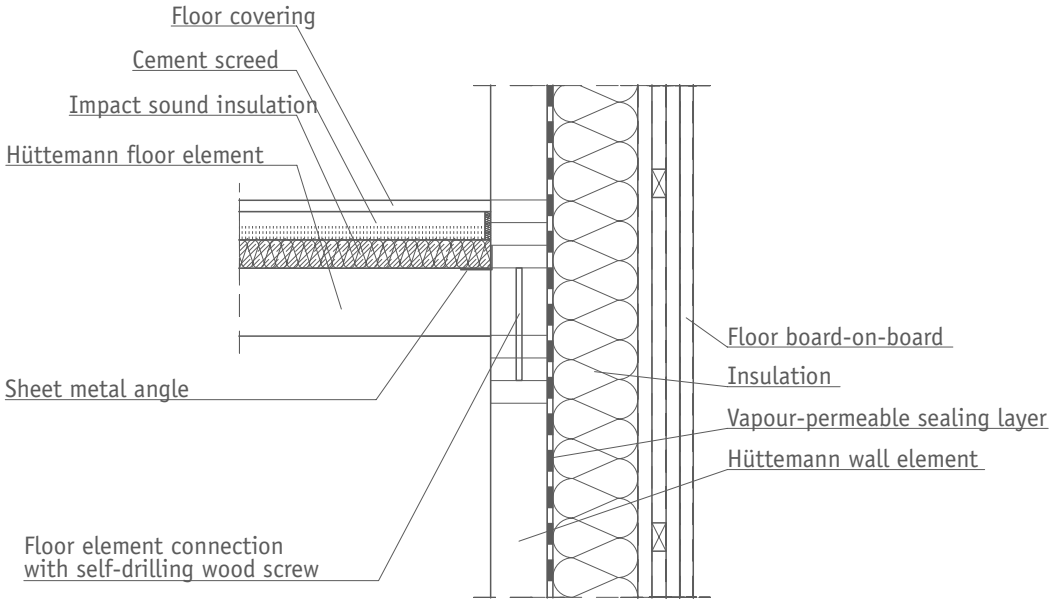

DETAIL 7
FLOOR ELEMENT TO WALL ELEMENT CONNECTION (INNER WALL)

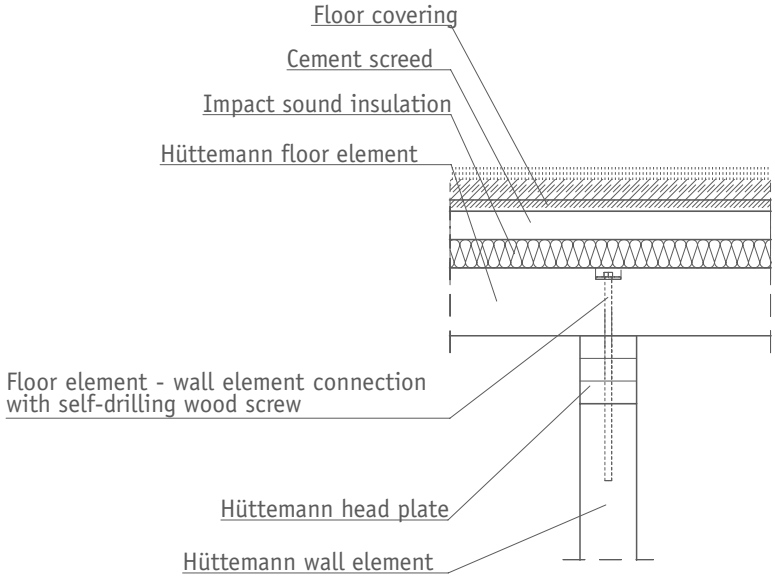

HÜTTEMANN

DETAIL 8
FLOOR PLATE - SOLID WALL CONNECTION

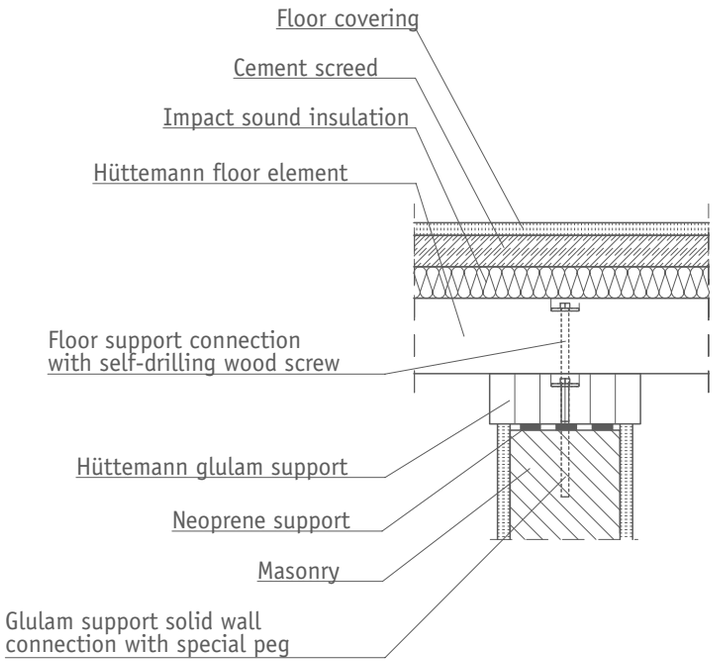

DETAIL 9
FLOOR ELEMENT - RING ANCHOR CONNECTION

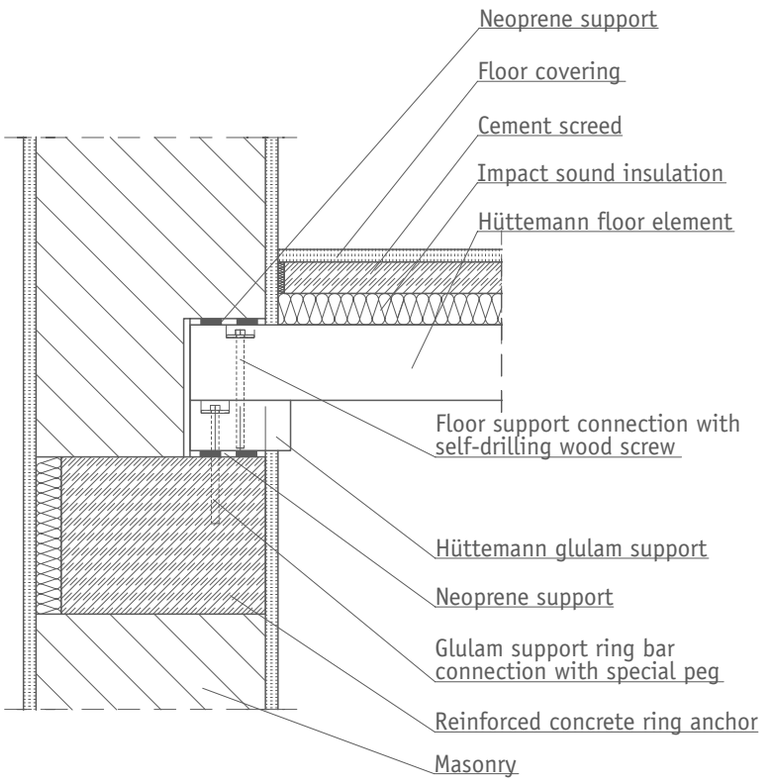

HÜTTEMANN

DETAIL 10
BINDING BEAM - RING ANCHOR CONNECTION

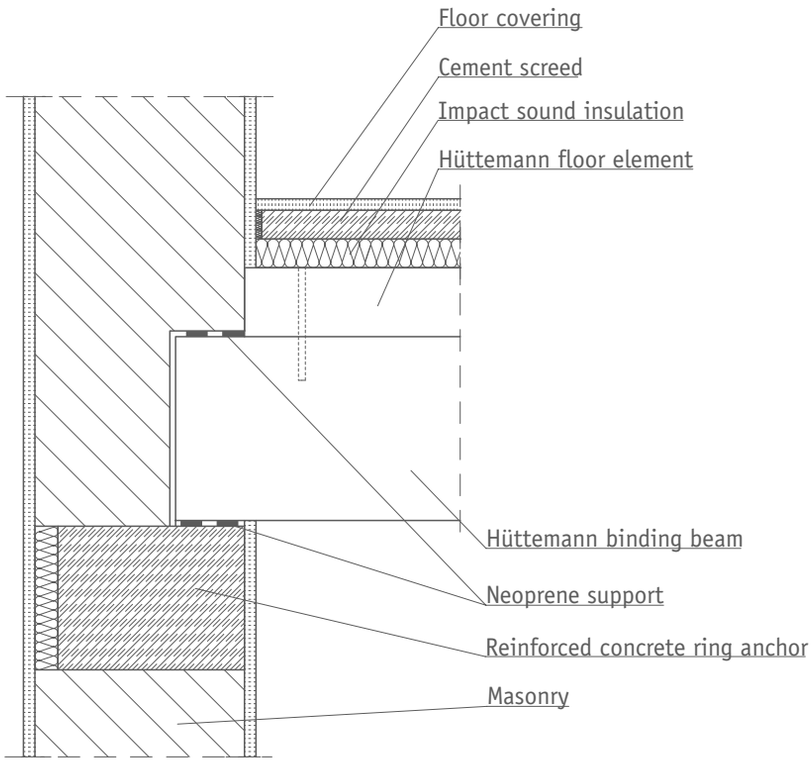

DETAIL 11
FLOOR ELEMENT - WOOD FRAME WALL CONNECTION

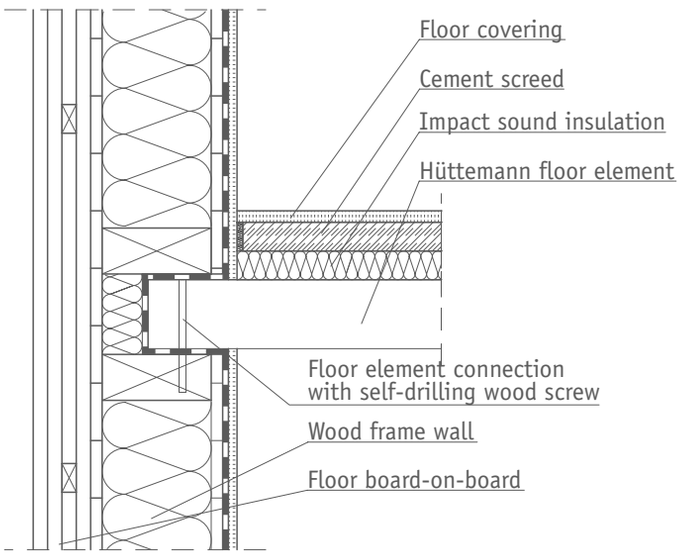

HÜTTEMANN

DETAIL 12
FLOOR ELEMENT TO WOOD FRAME WALL CONNECTION WITH INSTALLATION LEVEL

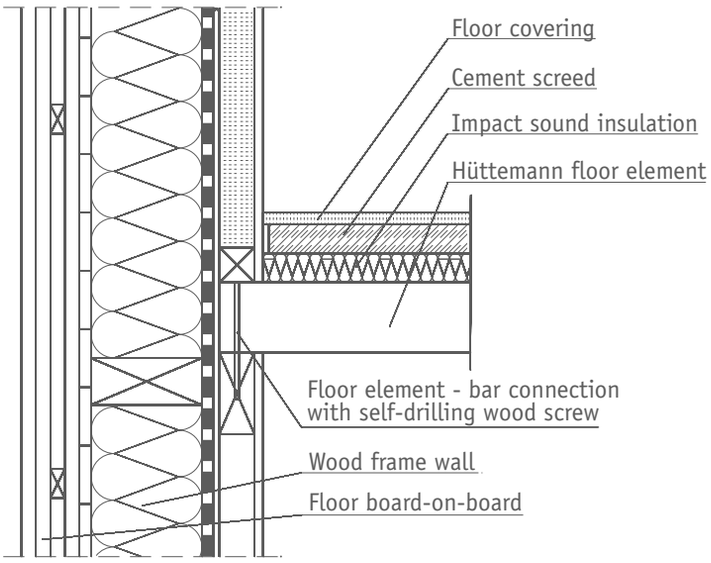

DETAIL 13
FLOOR ELEMENT TO WOOD FRAME WALL CONNECTION WITH SECONDARY-PRIMARY BEAM

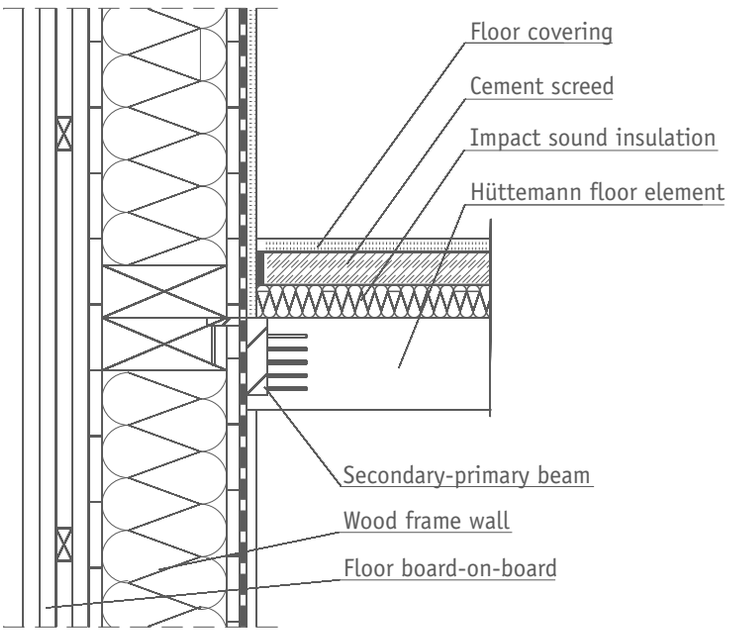

HÜTTEMANN

DETAIL 14
FLOOR ELEMENT - BINDING BEAM CONNECTION

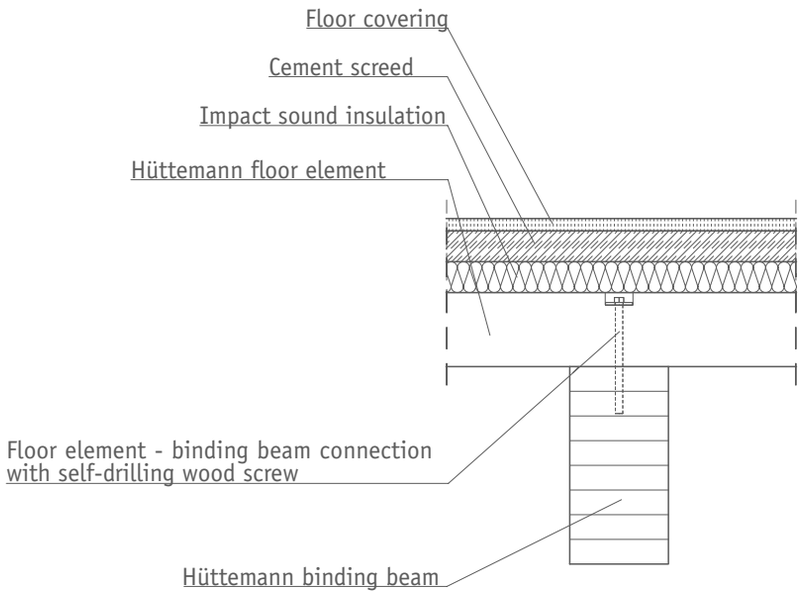

DETAIL 15
FLOOR ELEMENT - BINDING BEAM CONNECTION

(Special aspect: Varying floor span direction)

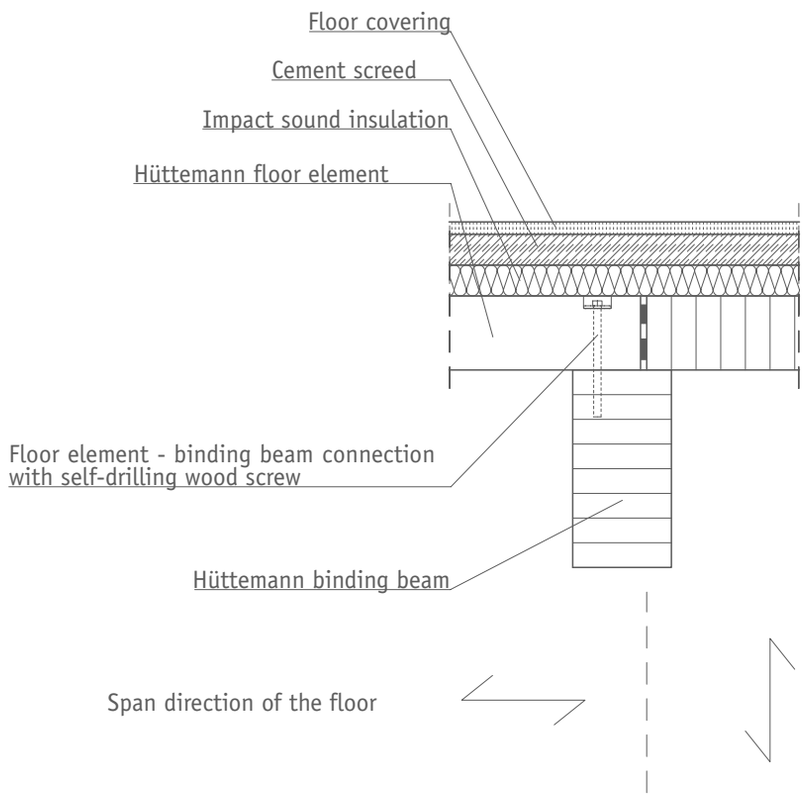

HÜTTEMANN

FLOOR

Cost Overview

In addition to the attractive appearance and the comfortable room climate, costs are an important factor in the decision to use Hüttemann glulam timber floor elements. In this overview, we list the material and installation costs for our floor system as a guide for builders. This only represents a cost estimate. You should obtain a detailed offer from your woodworking contractor.

Hüttemann floor element:

Material costs for glulam floor elements:	t = 12 cm:	62.00 €/m²
Material costs for glulam flooring sleepers, etc.:	w/h = 8/16 cm:	6.00 €/m²
Material costs for hexagon head cap wood screws/express anchor:		1.00 €/m²
Assembly / trimming costs for glulam floor elements:		20.00 €/m²
Total of material + installation costs:		89.00 €/m² plus VAT

Additional cost benefits should be considered:

- Time savings due to immediate starting of subsequent work.
  Reinforced concrete floors require a long curing time.

- Freedom of movement is ensured within the rooms below.
  For reinforced concrete floors, time must be planned for the curing of additional supports.

- No additional moisture is produced during installation.
  Approx. 170 litres of water per m3 are required for creating reinforced concrete floors. This corresponds to 2,720 litres of water for a 16 cm thick floor with an area of 100 m2. The moisture is returned to the environment during curing.

- The bottom side of the Hüttemann glulam elements is very decorative.
  Reinforced concrete floors generate additional costs for levelling and covering work.

HÜTTEMANN

WALL

Glulam timber elements can be used as load-bearing and non-load-bearing walls. The butt joints of the glulam timber elements run vertically. The individual components are connected with nails or screws as well as the usual shaped sheet metal parts. The wall thickness is generally 10 cm. This allows for supporting of very high loads, assuming normal room heights.

The wall system is vapour-permeable, meaning that a certain vapour pressure exists both inside the building and outside; the relative humidity. If the relative humidity inside is the same as the relative humidity outside, they are in equilibrium. If the relative humidity differs, a vapour pressure gradient exists.

The vapour pressure shifts to the lower pressure side of the building component, i.e. it diffuses. The flow to establish equilibrium is called diffusion. In vapour-permeable systems, a light resistance against this vapour pressure is generated by the installed materials.

If the humidity inside is high, meaning a high vapour pressure, the air attempts to achieve equilibrium with the low vapour pressure on the outside. This is a very slow process that should not be misunderstood as "breathing" by the wall; rather, it leads to controlled drying out of the wall from the inside to the outside.

In the case of the wall described below, the glulam elements with a material thickness of 10 cm have an sd value of 4.00 m. The vapour seal layer (vapour barrier) has an sd value of 2.00 m, and the vapour-permeable insulation (ideally soft wood fibre) with a material thickness of 16 cm has an sd value of 0.16 m.

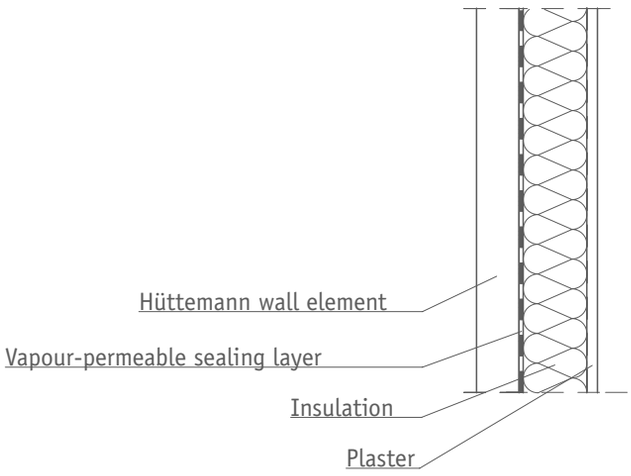

HÜTTEMANN

DETAIL 16
WALL ELEMENTS CORNER CONNECTION

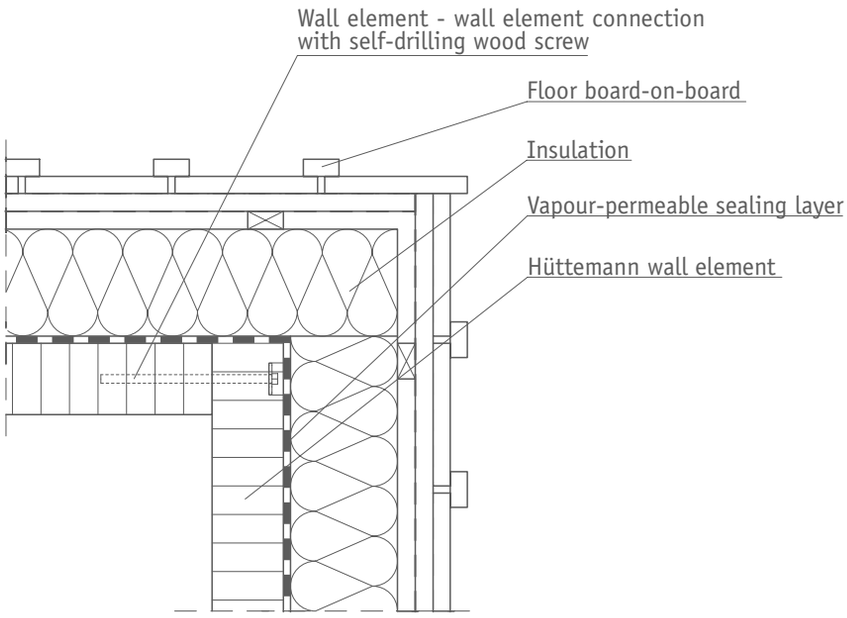

DETAIL 17
WALL ELEMENTS CONNECTION (INSIDE WALL)

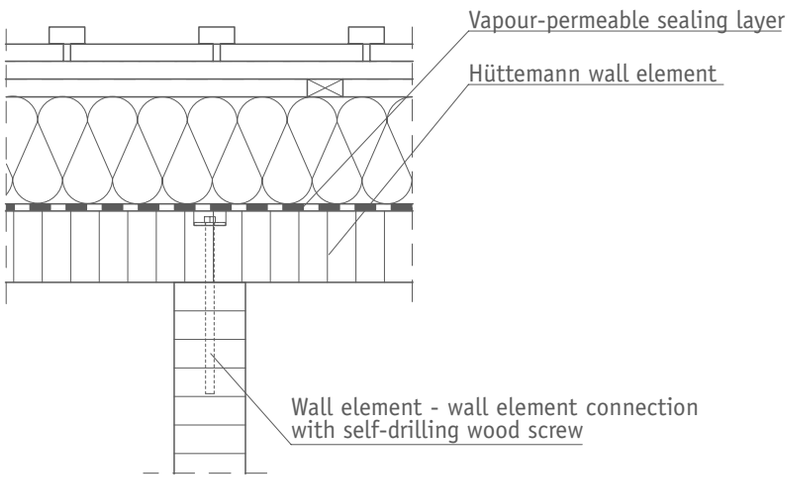

HÜTTEMANN

DETAIL 18
WALL ELEMENT - FLOOR PLATE CONNECTION

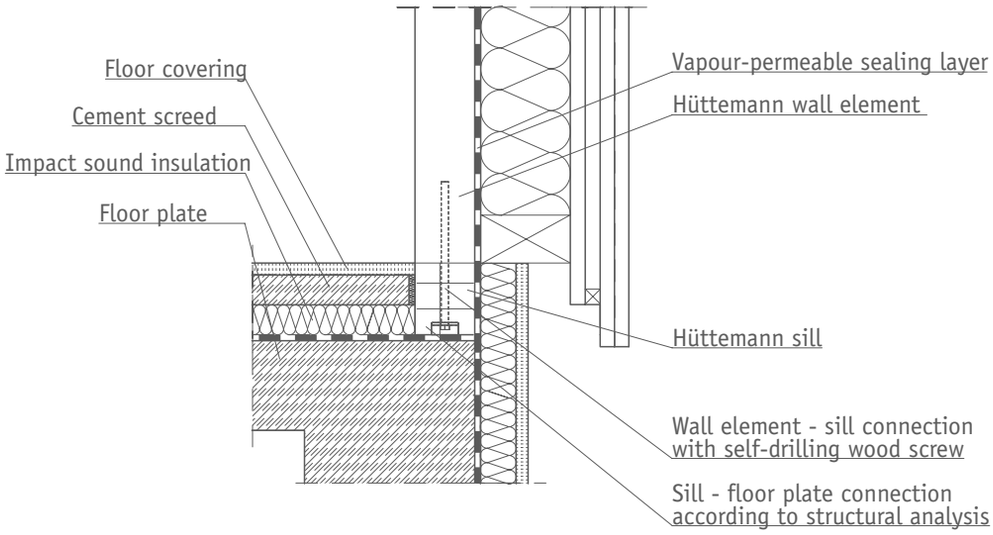

DETAIL 19
WALL ELEMENT - HEAD PLATE CONNECTION WITH APERTURE PLATE

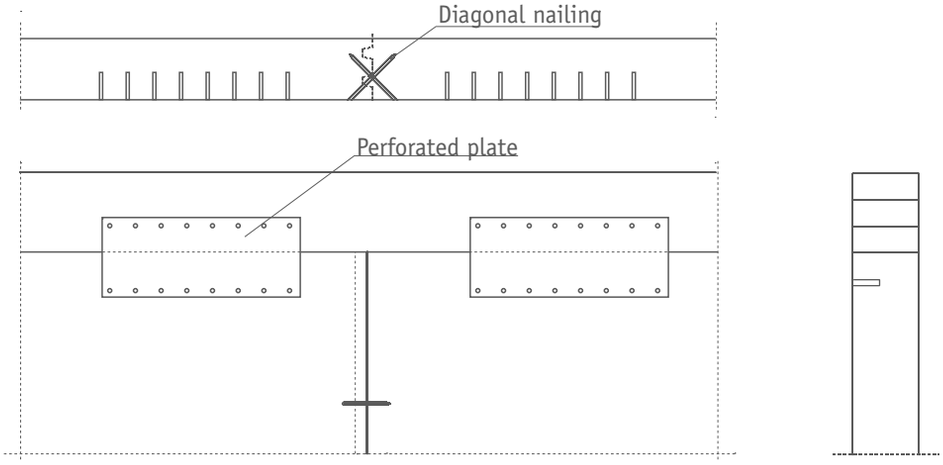

DETAIL 20
WALL ELEMENT - HEAD PLATE CONNECTION WITH SELF-DRILLING WOOD SCREWS

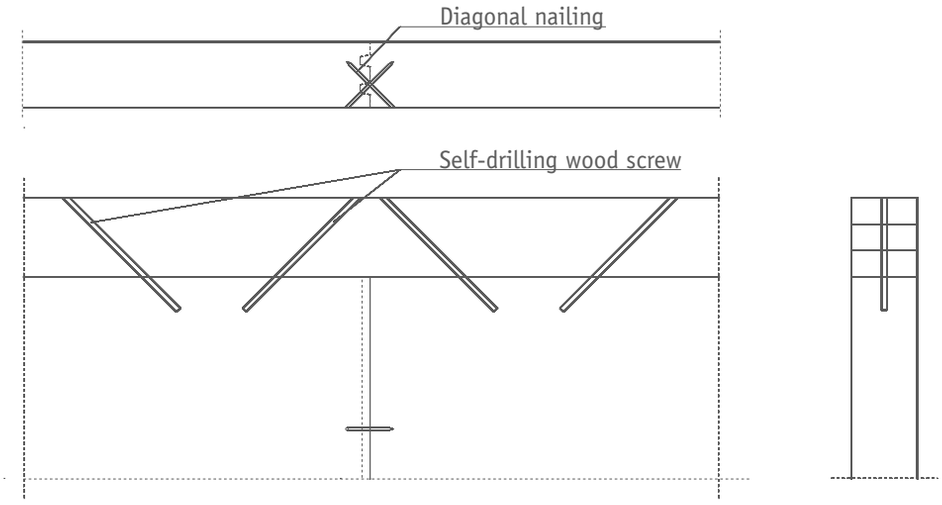

HÜTTEMANN

WALL

Cost Overview

Wall elements are a solid and dry alternative to masonry walls.

This only represents a cost estimate. You should obtain a detailed offer from your woodworking contractor. In addition, the thermal insulation, seal layer and outside wall covering (plaster, boarding or brick facing) must also be calculated into the costs.

Hüttemann wall elements:

Material costs for glulam wall elements:	t = 10 cm:	52.00 €/m²
Material costs for shaped sheet metal parts, screws, etc.:		3.00 €/m²
Assembly / trimming costs for glulam wall elements		30.00 €/m²
Total of material + installation costs		85.00 €/m² plus VAT

Please note the following when using and installing glulam timber elements:
The outer layers of the glulam elements may take up moisture during the construction phase.

In event of heavy water exposure (e.g. rainfall or construction water), an extreme rise in the wood moisture can occur. In exceptional cases, this can change the volume of the glulam elements enough to cause displacement and expansion forces acting on the connected structures. For this reason, the elements must be protected against direct moisture exposure by covering them with plastic. Excess water must be removed with air dehumidifiers to slowly reduce the wood moisture.

All information corresponds to the current level of technical knowledge. Hüttemann Holz GmbH & Co. KG does not accept any liability. This also applies to print errors and subsequent changes to technical information

HÜTTEMANN

SAMPLE FOR SUBMISSION

Sample request for proposals for Hüttemann roof, floor and wall elements.
The variable information is marked in red.

Item 1 Hüttemann floor elements
GL24, underside visible, components manufactured of coniferous timber (wood type spruce) acc. to DIN 4074 and DIN 1052 and delivered free usage site.
Technical data:

Element thickness	t	=	12 cm
Element width	w	=	60 cm
Element length	l	=	4.00 m

The profiling shall be double groove - double tongue. The components are completely trimmed. The connecting parts are described in a separate item.
Unloading and installation not included.
20 units at € _____ € _____

Item 2 Hüttemann floor elements
GL24, underside visible, components manufactured of coniferous timber (wood type spruce) acc. to DIN 4074 and DIN 1052 and delivered free usage site.
Technical data:

Element thickness:	t	=	14 cm
Element width:	w	=	60 cm
Element length:	l	=	4.50 m

The profiling shall be groove and rebate. The components are completely trimmed. Delivery of the external tongues and the top-side derived timber product strips must be calculated into the items. The connecting parts are described in a separate item.
Unloading and installation not included.
20 units at € _____ € _____

Item 3 Hüttemann wall elements
In the east side gable area, GL24, surface visible, components manufactured of coniferous timber (wood type spruce) acc. to DIN 4074 and DIN 1052 and delivered free usage site.
Technical data:

Element thickness	t	=	10 cm
Element width	w	=	60 cm
Average element length	m	=	5.17 m

The profiling shall be double groove - double tongue. The components are completely trimmed. Delivery of the outside derived timber product strips must be calculated into the item. The connecting parts as well as gable head plates and sills are described in a separate item.
Unloading and installation not included.
8 units at € _____ € _____

Supplemental charge 12.80 €